Product Catalog

Length measuring machine 01

Thread Comprehensive Measuring Machine 15

Height gauge 21

Gauge block comparator 26

Ball diameter measuring instrument 30

Indicator gauge calibrator 31

Squareness gauge 32

Straightness Gauge 33

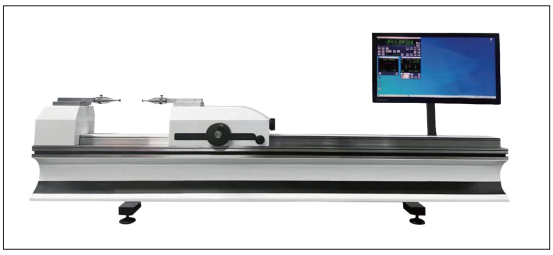

1 NANO-CHECK Length Measuring Machine

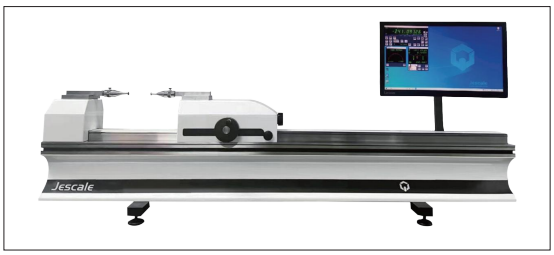

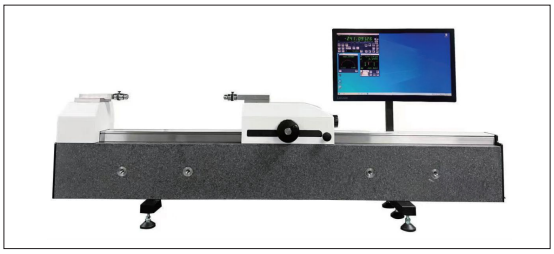

2 UCK-P Length Measuring Machine

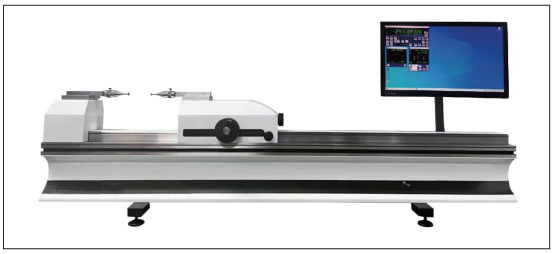

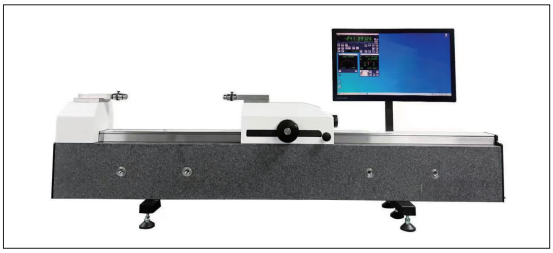

3 UCK Length Measuring Machine

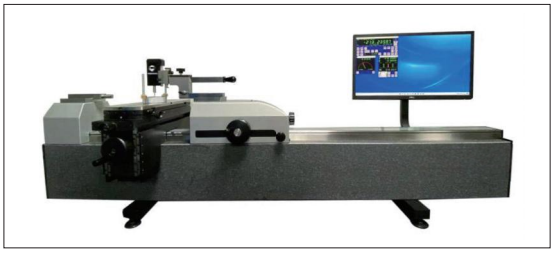

4 UCK-S Length Measuring Machine

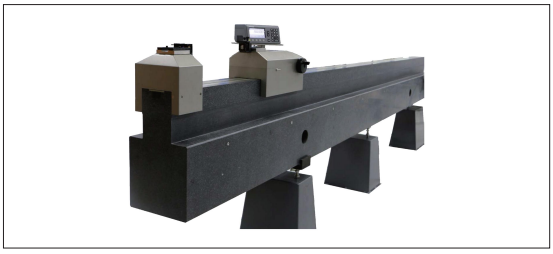

5 XG Length Measuring Machine

Length measuring machine

High-precision Length Measuring Instrument

The NANO-CHECK series of high-precision length measuring machines adopt a newly developed grating measurement system customized in cooperation with the Germany brand Heidenhain. The grating scale length is 350 mm, ensuring high measurement precision and absolute measurement within a wide range. The base is cast from special materials, ensuring stability and reliability of the instrument. This high-precision universal length measuring machine is one of the benchmarks for the length dimension traceability in the metrology lab. It is used in metrology lab to calibrate various measuring instruments such as gauge blocks, smooth (thread) ring gauges, smooth taper ring gauges, thread taper ring gauges, bearing inner and outer raceways, spline gauges, calipers, calibration rods, rulers and meters.

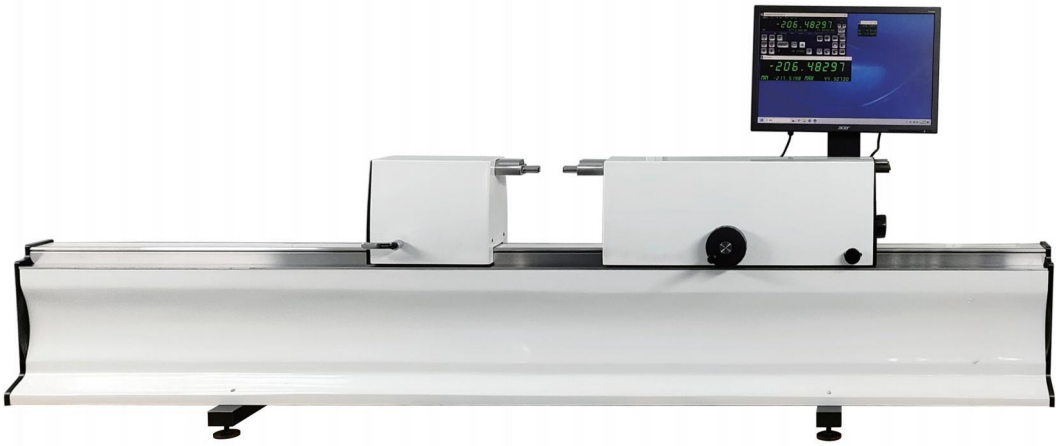

Technique Features

- Absolute measurement range: 350 mm
- Grating scale length: 350 mm
- Highest resolution: 0.001μm
- Maximum allowable error: [0.085 + L(mm)/2000]μm
- Measuring force: 0-12N, continuously adjustable
- Electronic sensor measuring force: 0.3N
- Universal workbench can be easily moved along the X-axis direction
- Heidenhain high-precision new grating measurement system
- Built-in temperature compensation system for real-time compensation

Dimensions & Spec.

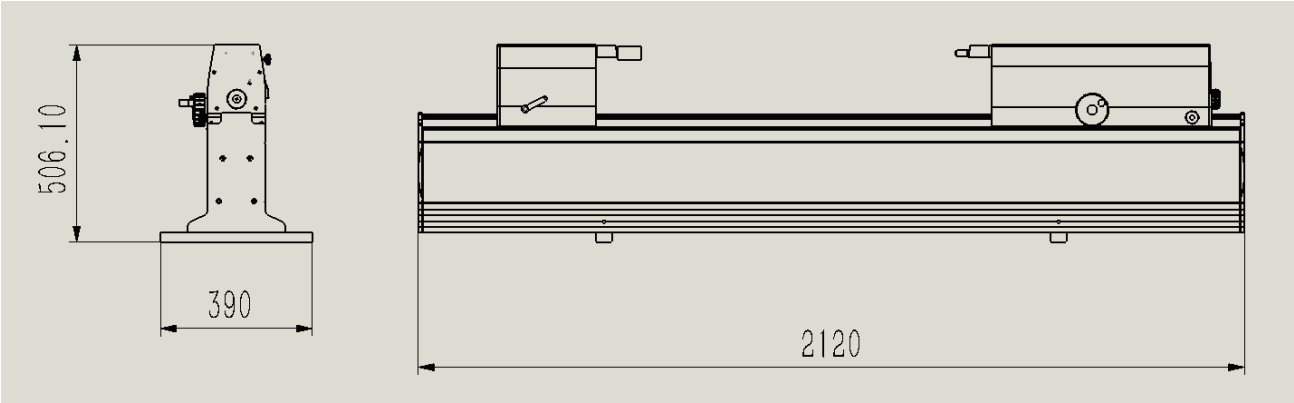

Technical Parameters

Model		NANO-CHECK 350	NANO-CHECK 600	NANO-CHECK 1100
Absolute measurement range	mm	350	350	350
Relative measurement range	mm	0-350	0-600	0-1100
Maximum allowable error	μm	0.085+L(mm)/2000		
Maximum resolution	μm	0.001		
Repeatability (2S)	μm	0.03		
Force measurement (software adjustable)	N	0-12		
Ambient temperature	℃	+10 to +40		
Relative humidity	%	20-80		
Weight	kg	350	420	500
Calibration requirements		Humidity 50% ±5%; calibration temperature 20°C ±0.2°C; temperature gradient ≤0.5°C/hour		

◆ It can be used with different accessories

High-precision Length Measuring Instrument

The UCK-P length measuring machine adopts high-precision metal long grating scale, with extremely high straightness of the guide rail and good wear resistance of the material, which can ensure high-precision full-range absolute measurement. There is no need to use a gauge block to calibrate the instrument before measuring any size measuring tool. There is no transmission error (gauge block reference error, isothermal error with the measured piece, secondary clamping and multiple alignment errors, etc.), which greatly improves the measurement work efficiency, ensuring measurement precision. Measuring force is continuously adjustable from 0 to 12N, and the principle of the force sensor avoids force errors caused by the instrument table not being level and environmental vibration during the loading of old-fashioned weights. The probe has good coaxiality, and there is no need to adjust the probe multiple times before measuring the workpiece.
The workbench can slide freely along the X-axis direction of the instrument guide rail and lock. It is convenient to adjust the clamping and measure various lengths of measuring instruments such as gauge blocks, smooth threaded ring and plug gauges, calipers, calibration rods, rulers and meters. The calibration efficiency is extremely high, and the user base is wide.

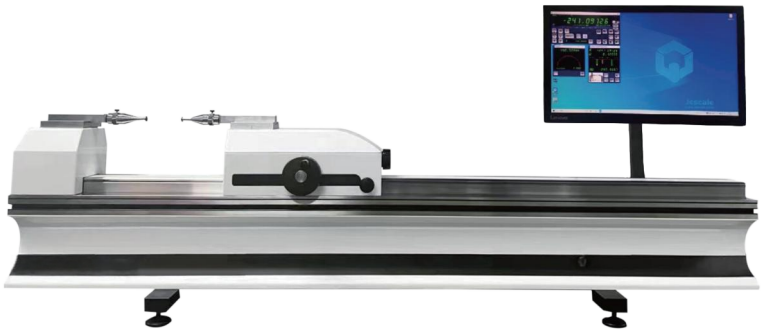

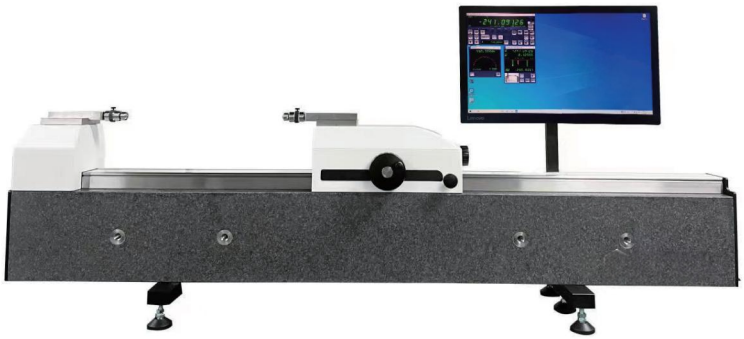

Technique Features

- Full-range absolute measurement, improving detection efficiency
- Grating scale length: Full range
- Resolution: 0.01μm
- Base made of QT450 cast iron or marble,
- stable and reliable base structure to effectively resist stress;
- Measuring force: Electronic measuring force: 0-12N, continuously adjustable
- High coaxiality of the probe, no need for repeated centering
- Universal workbench can move freely along the instrument guide rail direction and lock

Dimensions & Spec.

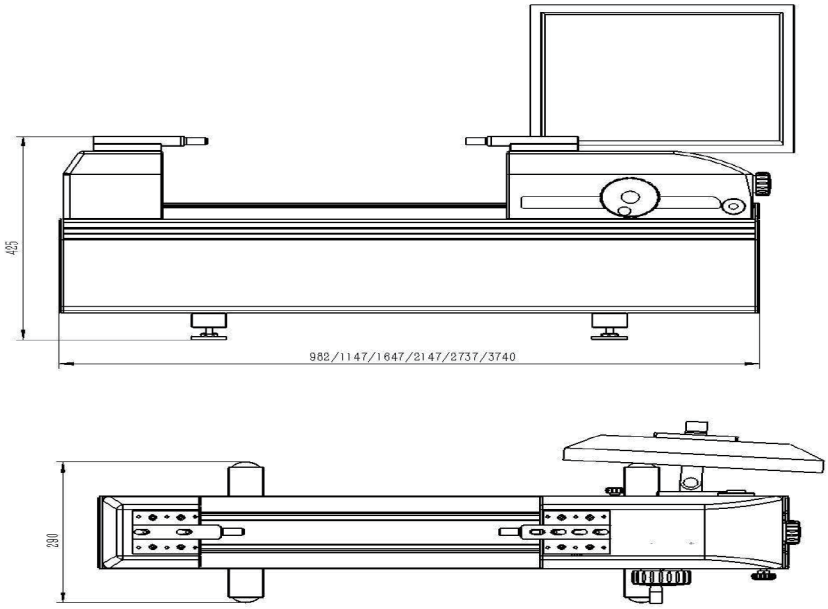

Technical Parameters

Model		UCK-P300	UCK-P500	UCK-P1000	UCK-P1500	UCK-P2000	UCK-P3000
External dimensions	mm	0-300	0-500	0-1000	0-1500	0-2000	0-3000
Internal dimensions	mm	1-180	1-380	1-880	1-1380	1-1880	1-2880
Grating scale length	mm	330	530	1030	1530	2030	3030
Maximum allowable error	μm	≤0.15+L(mm)/1000					
Higher precision	μm	≤0.12+L(mm)/1000					
Measuring force	N	0-12N, electronic force measurement, continuously adjustable					
Resolution	μm	0.01					
Repeatability (2S)	μm	≤0.1					
Universal workbench		It moves freely along the guide rail direction					
Measuring system		Metal grating measurement system					
Ambient temperature	℃	+10 To +40					
Ambient humidity		20% To 70%					
Weight	kg	130	180	260	310	620	960
Calibration requirements		Humidity: 50% ±5%; Calibration temperature: 20°C ±1°C; Temperature gradient: ≤0.5°C/hour					

- For technical details of higher precision models, please consult Jescale.
- The UCK-P3000 model base is made of marble.

High-precision Length Measuring Instrument

The UCK length measuring machine uses a high-precision metal grating ruler, with very high guide rail straightness and good wear resistance material, ensuring high precision absolute measurement throughout the process. There is no need to use a gauge block to calibrate the instrument before measuring any size measuring tool. There is no transmission error (gauge block reference error, isothermal error with the measured piece, secondary clamping and multiple alignment errors, etc.), which greatly improves the measurement work efficiency, ensuring measurement precision. Measuring force is continuously adjustable from 0 to 12N, and the principle of the force sensor avoids force errors caused by the instrument table not being level and environmental vibration during the loading of old-fashioned weights. The probe has good coaxiality, and there is no need to adjust the probe multiple times before measuring the workpiece.

The workbench can slide freely along the X-axis direction of the instrument guide rail and lock. It's conveniently adjustable for clamping and measuring various length measuring tools such as: gauge blocks, smooth (threaded) ring gauges, calipers, calibration rods, rulers, and meters. The calibration efficiency is extremely high, and the user base is wide.

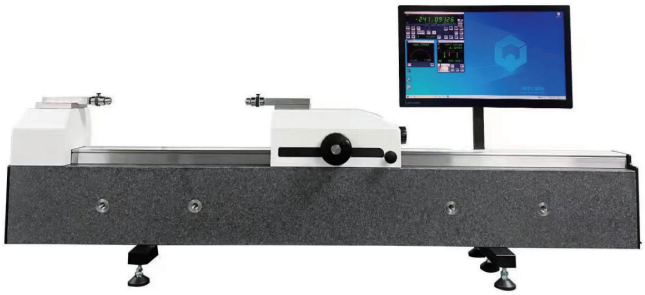

Technique Features

- Full-range absolute measurement, improving detection efficiency
- Grating scale length: Full range
- Resolution: 0.01μm
- The base is made of QT450 cast iron or marble, ensuring stability and reliability.
- The X-shaped base structure effectively counteracts stress.
- Measuring force: electronic force measurement of 0-12N, continuously adjustable

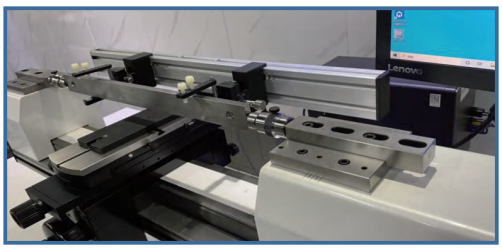

Full-range absolute measurement

The UCK series length gauges come standard with a zero-expansion high-precision grating ruler across the full range, reducing the impact of temperature changes on the instrument! Also, it can achieve absolute measurement throughout the entire range of the instrument, greatly improving measurement efficiency.

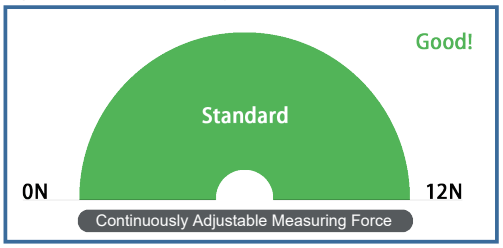

Measuring Force Continuously Adjustable

It employs a newly patented (Patent No.: 2018220145420) bidirectional force measurement technology, continuously adjustable between 0-12N, ensuring constant bidirectional force during measurement and stable precision.

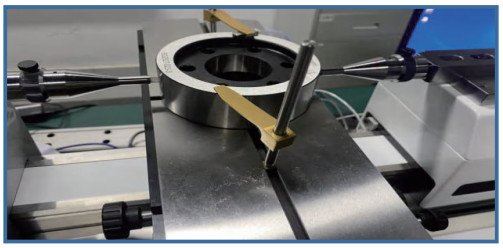

Meet Various Measurement Demands

With a wide variety of measurement attachments, it can flexibly measure and calibrate various ring gauges, internal and external thread gauges, calibration rods, gauge blocks, micrometers, etc.

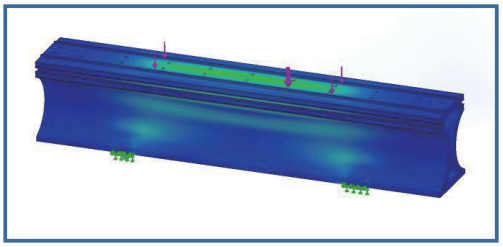

Specially Designed Cast Iron Base

The measuring base is X-shaped, designed through finite element analysis to reduce errors caused by deformations due to temperature changes and stress.

Function Application and Cases

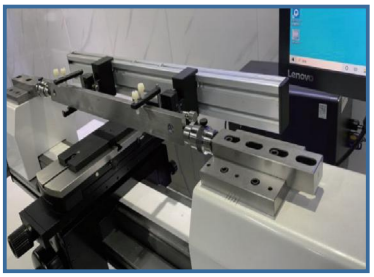

Calibration block

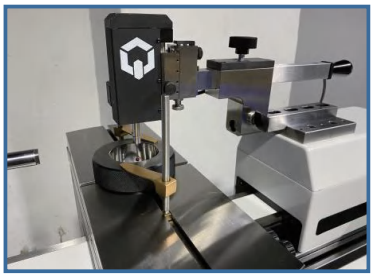

Small smooth ring gauges for calibration

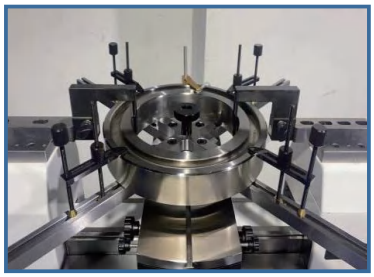

Large ring gauge for calibration

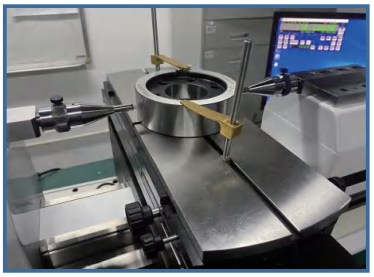

Smooth surface measurement plug gauge

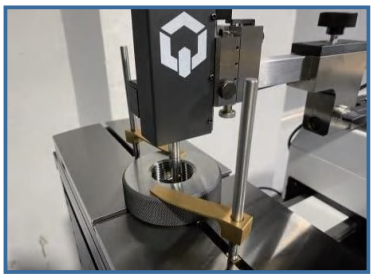

Thread measuring gauge

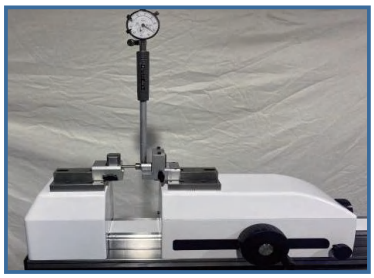

Inner diameter gauge

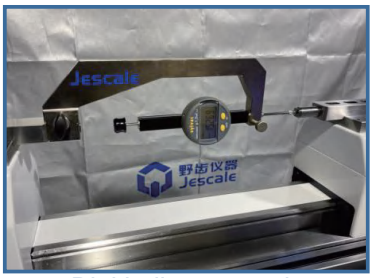

Dial indicators and micrometers for calibration

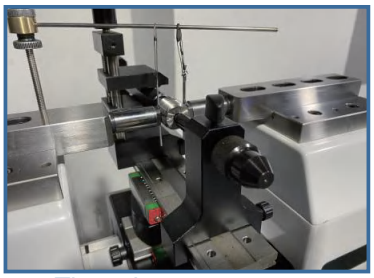

Thread measurement plug gauge

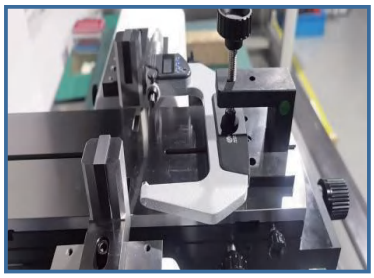

Calibration micrometer

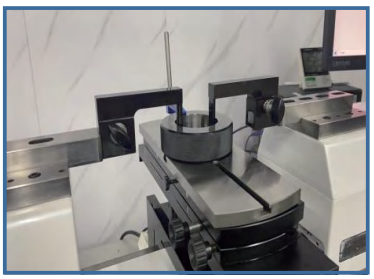

Smooth ring gauge for calibration

Digital display workbench

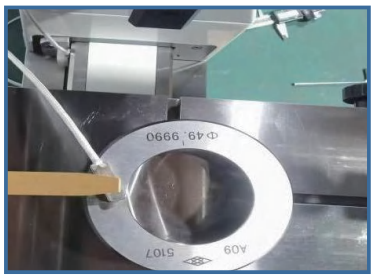

Temperature compensation module

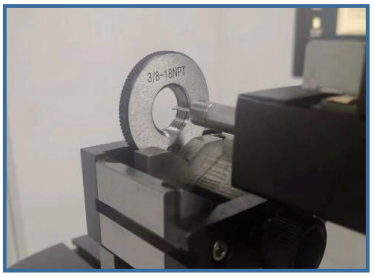

Tapered thread ring gauge for calibration

Tapered thread plug gauge for calibration

Calibration caliper

Professional Display, Management, and Measurement Software System

It is a basic requirement for the length measuring instrument to establish a connection with the computer system to monitor and measure the workpiece. It's also necessary to have software for controlling and analyzing the testing procedures. For many years, Jescale has been using its own developed measuring software that is suited to the usage habits of Chinese users.
U-Check SOFT consists of a series of software modules that can run under one desktop or operate independently, thus meeting the special requirements of customers.

U-Check Profession

The software includes all the functionalities of the length measuring device. Parameters and database structures can be freely defined for independent management. Automatic tolerance calculation can be implemented on most common inspection devices, such as smooth ring gauges, threaded ring gauges, dial indicators, internal diameter gauges, lever gauges, calipers, and micrometers.

U-Check-Element1

This module integrates the calculation and evaluation of ring gauges, plug gauges, gap gauges, and micrometers. After selecting the model and specifications of the part to be tested (for example, H8), the program can automatically determine the deviation from the normal size and the tolerance.

U-Check-Element2

This module includes the evaluation of various types of thread pitch measurements (using two-ball, three-ball, or three-pin methods for measuring internal and external threads), and can efficiently inspect all types of thread gauges. Even for complex thread geometries, the program can calculate reliable results.

U-Check-Element3

This module supports the calculation and measurement of tapered thread gauges; Based on ISO7-2 and DIN2999, it supports the calculation and measurement of pipe threads; based on DIN158, it can be used for the calculation and measurement of tapered metric threads; Based on BS21, it can be used for calculation and measurement of tubular threads.

U-Check-Element4

This module is used to inspect dial indicators, internal diameter gauges, and lever gauges. It can meet the user's internal standard requirements.

U-Check-Element5

This module supports the testing of internal and external jaw calipers and depth calipers. The deviation of the inspection instruments is determined by comparison with established standard points.

U-Check-Element6

This module supports inspection of various types of micrometers. All parameters can be evaluated directly by the program or according to the user's specific requirements.

Dimensions & Spec.

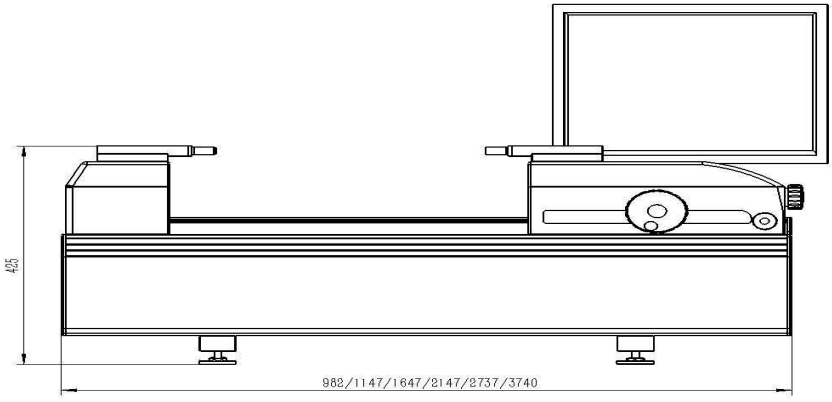

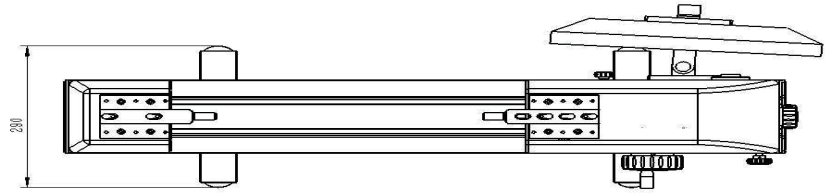

Technical Parameters

Model		UCK300	UCK500	UCK1000	UCK1500	UCK2000	UCK3000
External dimensions	mm	0-300	0-500	0-1000	0-1500	0-2000	0-3000
Internal dimensions	mm	1-180	1-380	1-880	1-1380	1-1880	1-2880
Grating scale length	mm	330	530	1030	1530	2030	3030
Maximum allowable error	μm	≤0.25+L(mm)/1000					
Higher precision	μm	≤0.2+L(mm)/1000					
Measuring force	N	0-12N, electronic force measurement, continuously adjustable					
Resolution	μm	0.01					
Repeatability (2S)	μm	≤0.2					
Universal workbench		It moves freely along the guide rail direction					
Measuring system		Metal grating measurement system					
Ambient temperature	℃	+10～+40					
Ambient humidity		20%～70%					
Weight	kg	125	155	185	260	620	960
Calibration requirements		Humidity: 50% ±5%; Calibration temperature: 20°C ±1°C; Temperature gradient: ≤0.5°C/hour					

- For technical details of higher precision models, please consult .The ba
- se of model UCK3000 is made of marble.

On-site Length Measuring Machine

The ShopFloorCheck on-site length measuring machine utilizes high-precision, long metal grating scales and an imported natural marble base to closely match the thermal expansion coefficient of steel test pieces. This minimizes temperature effects and ensures high-precision, absolute measurements throughout the entire process. Before measuring any sized gauge, there is no need to first calibrate the instrument with gauge blocks, thus eliminating transfer errors (such as gauge block baseline errors, differential temperature errors with the test piece, errors from secondary clamping, and multiple alignment errors). This significantly enhances measurement work efficiency and ensures measurement precision. Measuring force is continuously adjustable from 0 to 12N, and the principle of the force sensor avoids force errors caused by the instrument table not being level and environmental vibration during the loading of old-fashioned weights. The probe has good coaxiality, and there is no need to adjust the probe multiple times before measuring the workpiece.

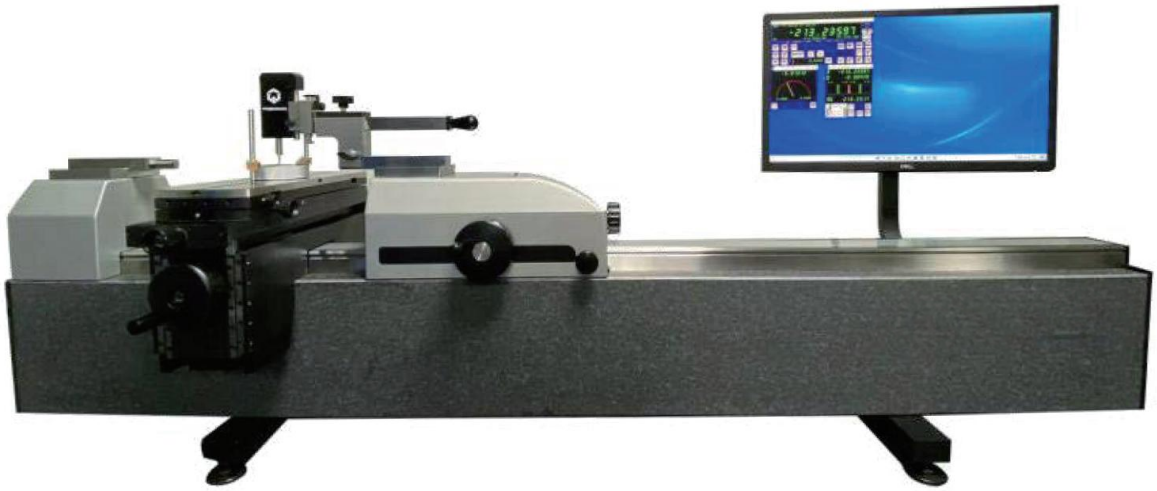

Technique Features

- Full-range absolute measurement, improving detection efficiency
- Grating scale length: Full range
- Resolution: 0.01μm
- The base is made of preferably imported natural marble, stable and reliable
- The workbench moves freely along the instrument's guide rail direction and locks in place
- High coaxiality of the probe, no need for repeated centering
- Measuring force: Electronic force measurement from 0 to 12 N, continuously adjustable.

Dimensions & Spec.

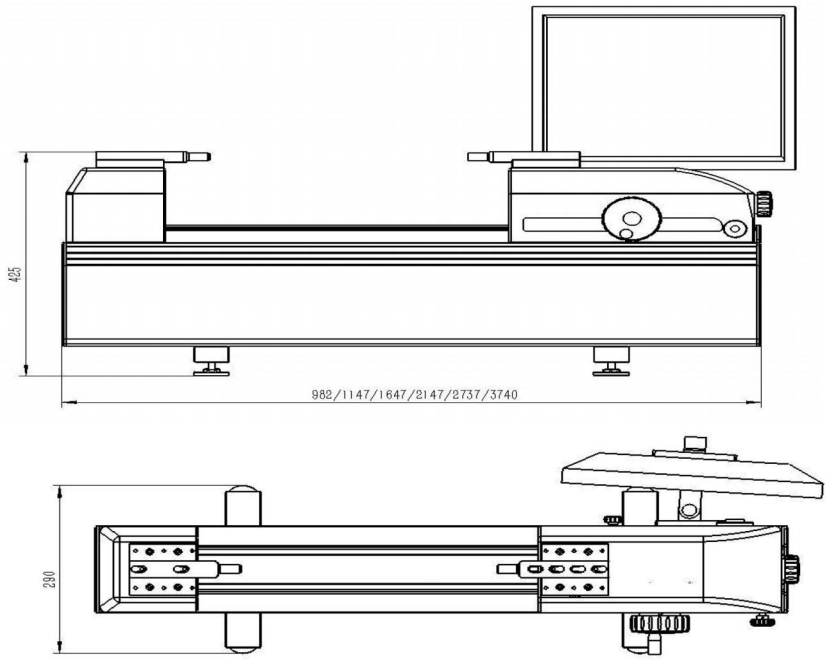

Technical Parameters

Model		UCK-SP300	UCK-SP500	UCK-SP1000	UCK-SP1500	UCK-SP2000	UCK-SP3000
External dimensions	mm	0-300	0-500	0-1000	0-1500	0-2000	0-3000
Internal dimensions	mm	1-180	1-380	1-880	1-1380	1-1880	1-2880
Grating scale length	mm	350	550	1050	1550	2050	3050
Maximum allowable error	μm	≤0.5+L(mm)/1000					
Measuring force	N	0-12N					
Resolution	μm	0.01					
Repeatability (2S)	μm	0.5					
Measuring system		Computer or German HEIDENHAIN ND287 display					
Ambient temperature	℃	+10～+40					
Ambient humidity		20%～70%					
Weight	kg	130	180	260	310	720	1180
Calibration requirements		Humidity: 50% ±5%; Calibration temperature: 20°C ±1°C; Temperature gradient: ≤0.5°C/hour					

Dimensions & Spec.

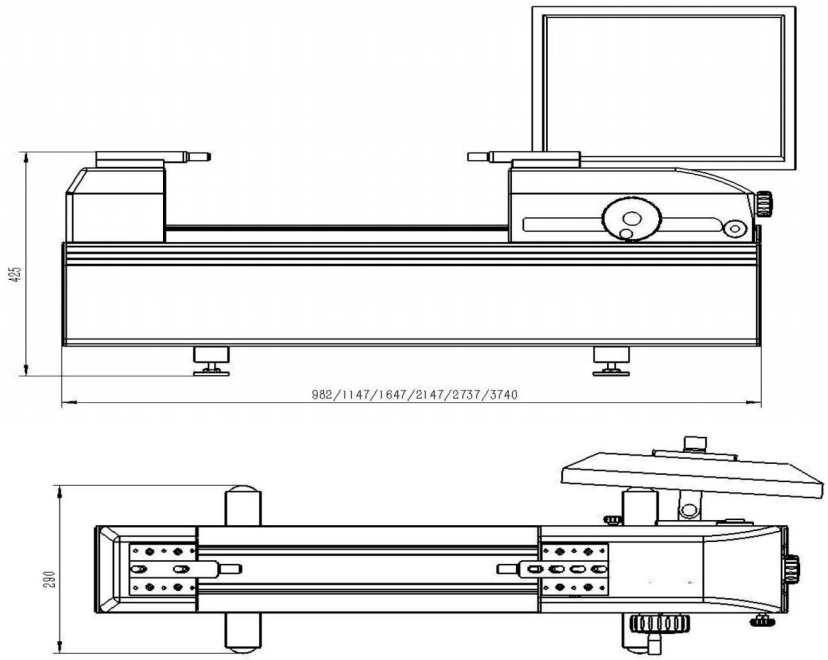

Technical Parameters

Model		UCK-S300	UCK-S500	UCK-S1000	UCK-S1500	UCK-S2000	UCK-S3000
External dimensions	mm	0-300	0-500	0-1000	0-1500	0-2000	0-3000
Internal dimensions	mm	1-180	1-380	1-880	1-1380	1-1880	1-2880
Grating scale length	mm	350	550	1050	1550	2050	3050
Maximum allowable error	μm	≤0.7+L(mm)/1000					
Measuring force	N	0-12N					
Resolution	μm	0.01					
Repeatability (2S)	μm	0.5					
Measuring system		Computer or German HEIDENHAIN ND287 display					
Ambient temperature	℃	+10～+40					
Ambient humidity		20%～70%					
Weight	kg	130	180	260	310	720	1180
Calibration requirements		Humidity: 50% ±5%; Calibration temperature: 20°C ±1°C; Temperature gradient: ≤0.5°C/hour					

On-site Large Length Measuring Machine

The XG series length measuring machine is primarily used for calibrating and certifying various large-size precision measuring instruments, gauges, and calibration rods up to twelve meters in length, such as block gauges, ring gauges, plug gauges, snap gauges, thread gauges, spline gauges, meters, rulers, and various calibration rods. It can also measure various precision internal and external dimensions such as gears, splines, calibration rods, and non-standard gauges, offering strong versatility. The extended grating scale ensures absolute measurement throughout the process, effectively eliminating transfer errors. It uses ultra-high precision marble guide rails, making it suitable for both metrology labs and workshop environments.

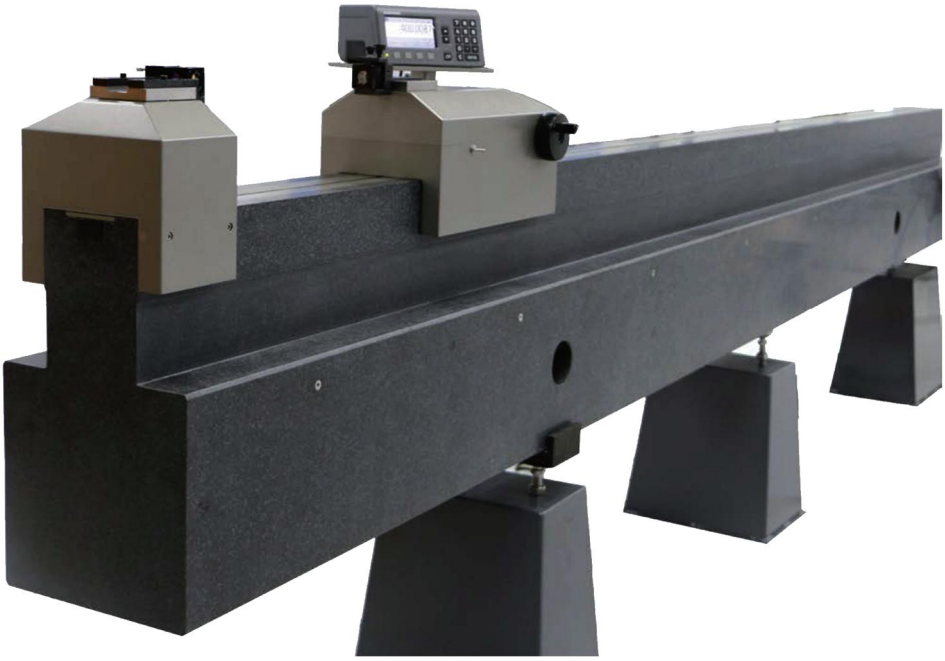

Technique Features

- Full-range absolute measurement, improving detection efficiency
- Grating scale length: Full range
- Resolution: 0.01μm
- Constant measuring force
- High coaxiality of the probe, no need for repeated centering
- The base is made of preferably imported natural marble, stable and reliable
- Air-floating measurement unit: Wear-free, easy to move
- Available in lengths up to 12 meters.

Standard Configuration

- Main unit
- A set of standard tungsten carbide probes
- Dust cover for the length measuring machine
- Test report and operation manual, one for each

Dimensions & Spec.

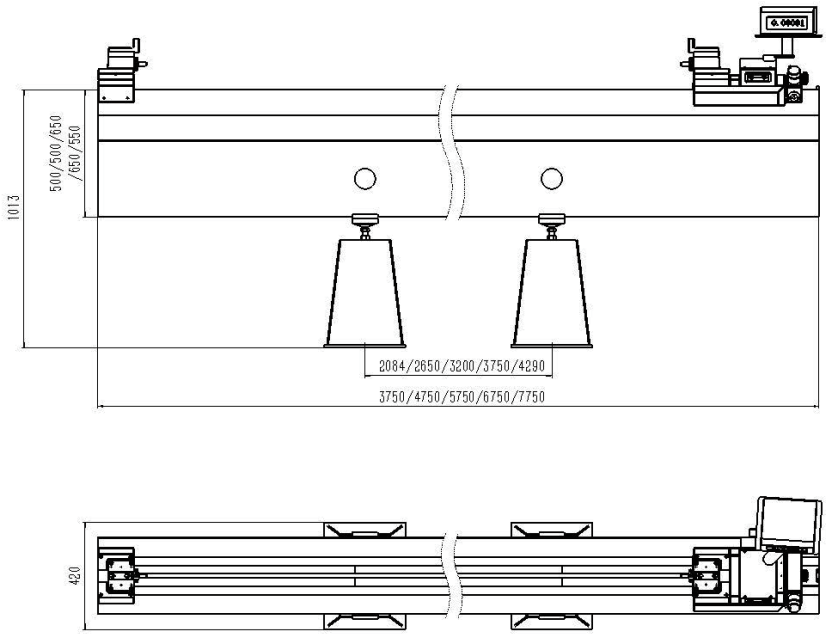

Technical Parameters

Model		XG3000	XG4000	XG5000	XG6000	XG8000	XG10000	XG12000
Measuring range	mm	3000	4000	5000	6000	8000	10000	12000
Grating scale length	mm	3050	4050	5050	6050	8050	10050	12050
Maximum allowable error	μm	≤0.7+L(mm)/750						
Measuring force	N	3N						
Resolution	μm	0.01						
Repeatability (2S)	μm	0.5						
Universal workbench		It moves freely along the guide rail direction						
Measuring system		Grating measurement system						
Ambient temperature	℃	+10～+40						
Ambient humidity		20%~70%						
Weight	kg	1060	1980	3200	3700	4600	5800	6800
Calibration requirements		Humidity: 50% ±5%; Calibration temperature: 20°C ±1°C; Temperature gradient: ≤0.5°C/hour						

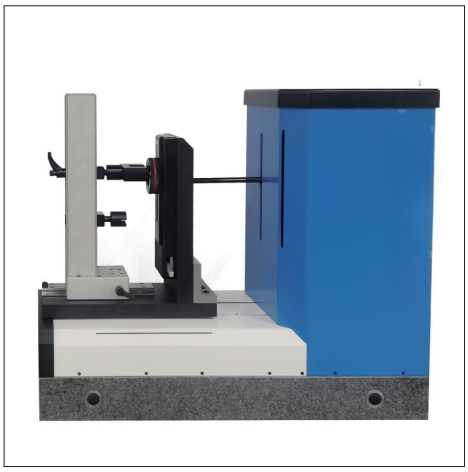

1 Thread Comprehensive Measuring Machine

2 Horizontal Thread Comprehensive Measuring Machine

Thread Comprehensive Measuring Machine

The TSM thread comprehensive measuring machine is suitable for measuring various internal and external dimensional gauges such as cylindrical thread plug gauges, cylindrical thread ring gauges, taper thread plug gauges, taper thread ring gauges, smooth ring gauges, and smooth plug gauges. It can measure parameters including effective diameter, simple pitch diameter, major diameter, minor diameter, pitch, half of the thread angle, tooth profile deviation, profile angle, and taper. It features simple, convenient, and quick operation, with a wide range of applications and extremely high measurement uncertainty, making it the ideal measuring instrument for various metrology laboratories conducting such parameter tests. The thread comprehensive measuring machine performs automatic measurements, completing a scan measurement of all measured parameters on a cross-section of a shaft in just two minutes and displaying all measurement results.

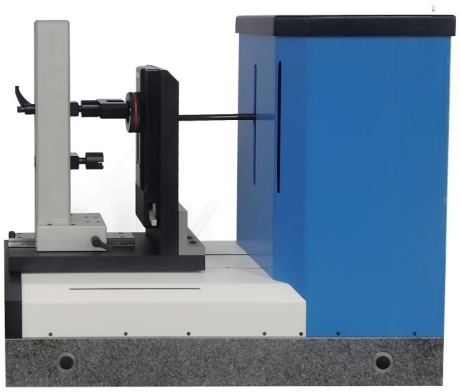

Fully Automatic Internal and External Thread Gauge

The probe automatically scans and measures the upper and lower threads in one measurement. All thread parameters can be measured and evaluated within two minutes.

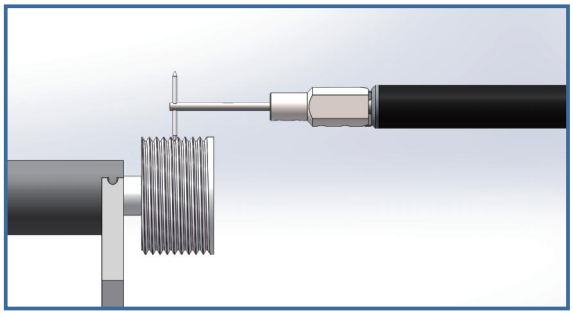

Innovative high-precision measurement system

Innovative high-precision, zero-expansion coefficient grating ruler is adopted to reduce the impact of temperature on the precision of the instrument!

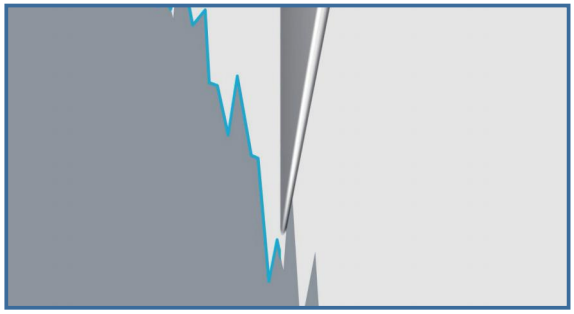

Constant force measurement system

The patented (Patent No.: 2021100620108) force adjustment system ensures precise and continuously adjustable measurement force. During measurement, the force remains constant, reducing precision errors caused by changes in measuring force.

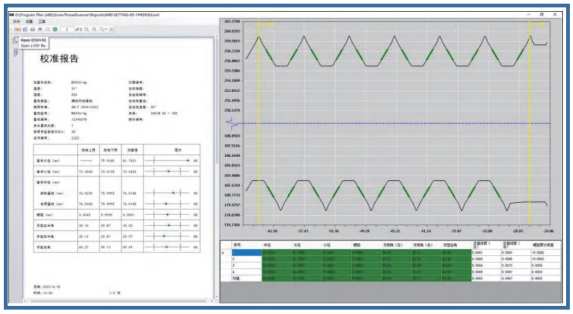

Intuitive Measurement Software

The measurement software Thread Work Manager independently developed by Jescale provides an efficient and intelligent solution for all traditional tasks of thread measurement. The user will gradually complete the entire process from measurement to data backup with the help of this software. The intuitive user interface makes operation simple, convenient, and reliable.

Measuring Full-size Parameters of Threads - Thread Measurement Project

Actual pitch diameter	Thread angle
Single actual pitch diameter	Half of thread angle
Effective pitch diameter equivalent	Taper
Major diameter	Tooth profile deviation
Minor diameter	Pipe threads
Pitch	Various smooth ring gauges and plug gauges
Multi-tooth pitch cumulative deviation (or pitch cumulative error)	Other various standards

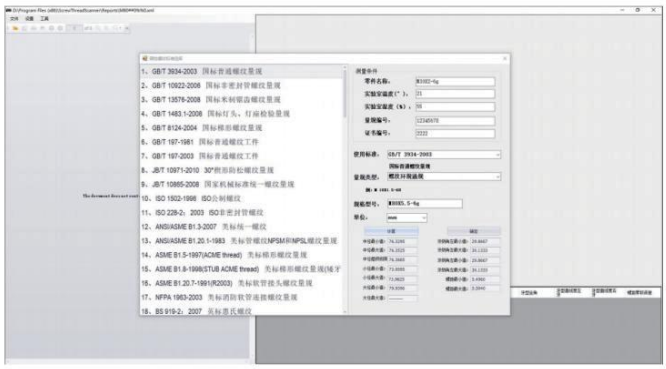

Built-in Rich and Powerful Thread Standard Database and Evaluation Standards

In the database, tolerance limit values for tens of thousands of threads and surface gauges are stored, allowing metrologists to conduct very detailed identification and evaluation of measurement results with assistance of a computer.

After the instrument is initialized and calibrated, calibration measurements of the measured gauge can be performed.

All measurement profiles can be converted into DXF format for further evaluation and analysis using the AUTOCAD system.

Various Standards Built into the Database, Enabling Automatic Comparison between Data of Measured Gauges or Workpieces and Those Standards

ANSI/ASME B1.2 Unified	Unified thread product standards and gauge standards
ANSI/ASME B1.20 NPT	American Seal Pipe Thread Standards
BS 21 Pipe threads	Taper Pipe Thread Standards
BS 919/1 Unified	Unified Thread Gauge Limits and Tolerance Specifications
BS 919/2 Whitworth	Whitworth Thread Gauges
BS 919/3 ISO Metric	Metric Screw Threads
ISO 7/2 Pipe threads	Pipe Threads (Taper Thread Standards)
ISO 228 Pipe threads	Pipe threads
ISO 286 Plain bores and shafts	Standard Tolerance Grades and Hole Axis Limit Tolerances
ISO 1502 Metric	Metric Screw Threads
DIN 13 Metric	Metric Screw Threads
DIN 2999 Pipe threads	Taper Pipe Thread Standards
DIN 7162 Plain rings and plugs	Smooth Working Ring Gauge, Gauge Manufacturing Tolerance, and Allowable Wear Standards
DIN 40401 Edison	Edison thread (lamp thread)
JIS	Japanese Thread Standard Section
API 7-2	Petroleum Threads, Various Thread Standards, and the Latest National Thread Inspection Regulations
GB/T 3934-2003	National Standard: General Thread Gauge
GB/T 1957-2006	National Standard: Smooth Limit Gauge
GB/T 11853-2003	National Standard: Mohs and Metric Taper Gauges
GB/T 11854-2003	National Standard: Gauges of 7:24 Tapers
GB/T 22091.1-2008	National Standard: 55° Sealed Pipe Thread (for Column and Cone Fitting)
ISO 7-2：2000（National Standard）	National Standard: 55° Sealed Pipe Thread (for Cone to Cone Fitting)
GB/T 197-2003	National Standard: Ordinary Thread Workpiece
GB/T 8336-2011	National Standard: Gas Cylinder Thread Gauge
JB/T 10971-2010	30° wedge type anti-loosening thread gauge
JB/T 10031-1999	National Machinery Standard for Pipe Thread Gauges with Thread Seals

Technical Parameters

Model		TSM6080	TSM10080	TSM16080	TSM18080
Measuring range of outer dimensions	mm	1.0 - 50	1.0 - 90	1.0 - 150	1.0 - 170
Internal measurement range	mm	2.5 - 60	2.5 - 100	2.5 - 160	2.5 - 180
Maximum scanning range	mm	80	80	80	80
Minimum pitch	mm	0.1			
Instrument wight	kg	155	160	165	225
Measurement uncertainty					
Cylindrical thread ring gauge or tapered thread ring gauge (minor diameters above 2.5mm, half of the thread angle ≥27°)					
Minor diameter	μm	2.0 + L/200	2.5 + L/200	2.5 + L/200	2.5 + L/200
Actual thread pitch diameter	μm	2.0 + L/200	2.5 + L/200	2.5 + L/200	2.5 + L/200
Pitch	μm	0.7 + L/200	0.7 + L/200	0.7 + L/200	0.7 + L/200
Cylindrical thread plug gauge or tapered thread plug gauge (major diameters above 1mm, half of the thread angle ≥27°					
Major diameter	μm	1.5 + L/200	2.0 + L/200	2.0 + L/200	2.0 + L/200
Actual thread pitch diameter	μm	1.5 + L/200	2.0 + L/200	2.0 + L/200	2.0 + L/200
Pitch	μm	0.7 + L/200	0.7 + L/200	0.7 + L/200	0.7 + L/200
Smooth cylindrical and conical ring gauges (with diameter above 10mm).					
Diameter of the smooth ring gauge	μm	1.0 + L/200	1.0 + L/200	1.5 + L/200	1.5 + L/200
Diameter of the smooth plug gauge	μm	1.0 + L/200	1.0 + L/200	1.5 + L/200	1.5 + L/200
Smooth cylindrical and conical ring gauges (with diameter of 1 to 10mm)					
Diameter of the smooth ring gauge	μm	1.5 + L/200	1.5 + L/200	1.5 + L/200	1.5 + L/200
Diameter of the smooth plug gauge	μm	1.5 + L/200	1.5 + L/200	1.5 + L/200	1.5 + L/200

Horizontal Thread Comprehensive Measuring Machine

The TSM universal thread scanning measuring machine employs a high-precision grating measurement system, a high-precision air-floating bearing drive system, a servo motor control system, and a high-performance industrial computer control system to achieve fully automated, high-precision comprehensive parameter measurement of threads.

Maximum measurement range: 650mm!

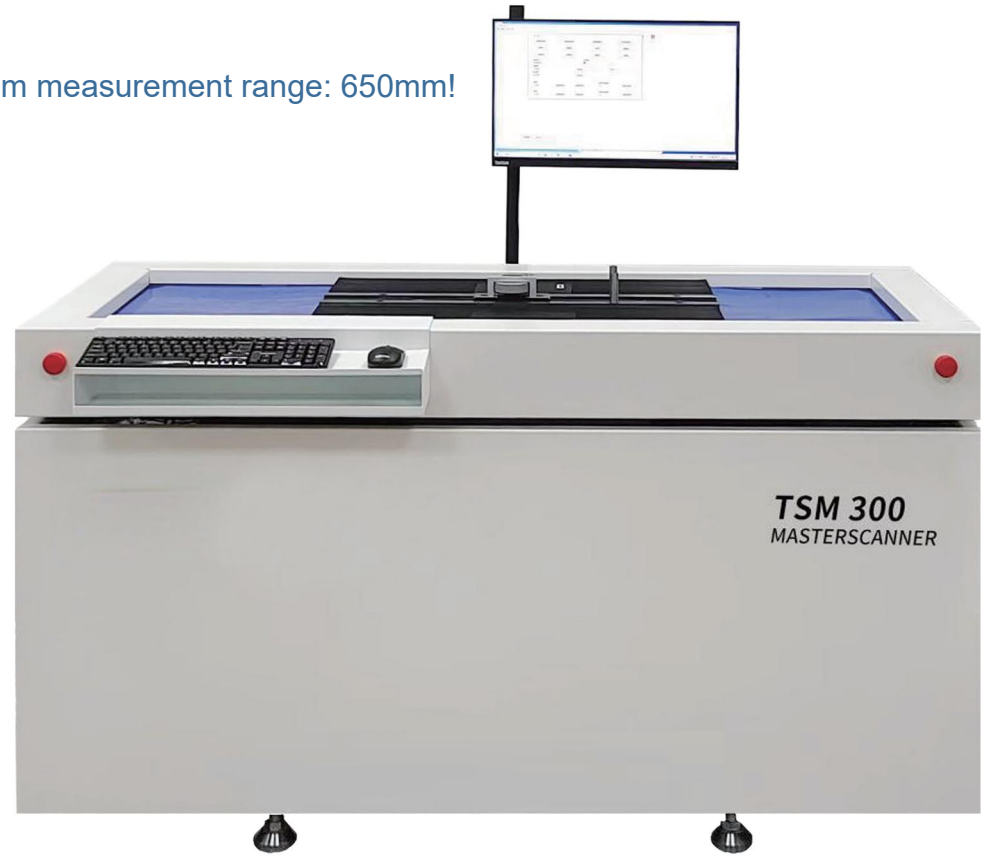

Technique Features

- Zero expansion coefficient grating ruler, reducing temperature influence
- Resolution: 0.01μm
- Imported natural marble base
- Fully automatic measurement of comprehensive thread parameters, completed in 2 minutes
- Calibration report automatically generated after all parameters are measured.
- Air-floating motion system with no friction, high linearity, and long lifespan.
- Patented constant force measurement technology ensures constant force during measurement.
- Automatic follow-up scanning technology, real-time tracking of surface movement.
- Measuring force: 40-150mN, reducing wear of measuring needles.

Technical Parameters

Model		TSM250	TSM350	TSM450	TSM550	TSM650
Measuring range of outer dimensions	mm	1.0 - 250	1.0 - 350	1.0 - 450	1.0 - 550	1.0 - 650
Internal measurement range	mm	2.5 - 250	2.5 - 350	2.5 - 450	2.5 - 550	2.5 - 650
Maximum scanning range	mm	250	250	250	250	250
Minimum pitch	mm	0.1				
Measurement uncertainty						
Cylindrical thread ring gauge or tapered thread ring gauge (minor diameters above 2.5mm, half of the thread angle ≥27°)						
Minor diameter	μm	3.0 + L/200				
Actual thread pitch diameter	μm	3.0 + L/200				
Pitch	μm	0.8 + L/200				
Cylindrical thread plug gauge or tapered thread plug gauge (major diameters above 1mm, half of the thread angle ≥27°						
Major diameter	μm	2.9 + L/200				
Actual thread pitch diameter	μm	2.9 + L/200				
Pitch	μm	0.8 + L/200				
Smooth ring gauges, plug gauges						
Diameter of the smooth ring gauge	μm	2.0 + L/200				
Diameter of the smooth plug gauge	μm	2.0+ L/200				

Application Cases

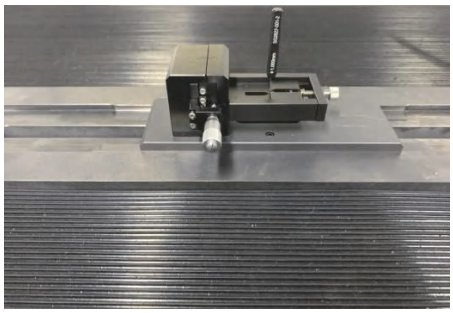

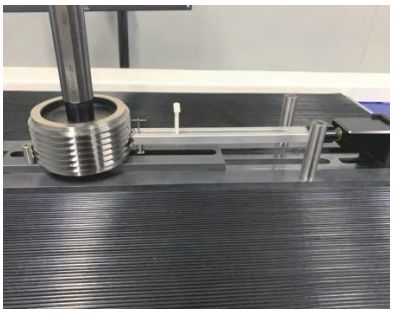

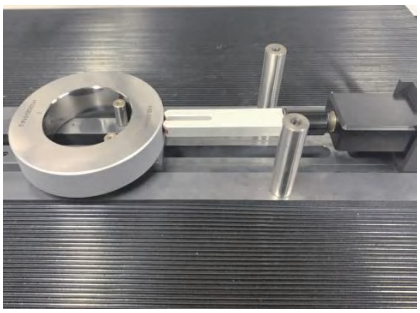

1 One-dimensional Height Gauge, H1 Series

2 Two-dimensional Height Gauge, H2 Series

One-dimensional Height Gauge, H1 Series

The Jescale H1 series one-dimensional height gauge boasts high measurement precision, affordability, and practicality. It can measure height, depth, squareness, slot width, inner and outer diameters, hole-to-hole distance,and axis-to-axis distance etc., making it suitable for use in machining environments. The measurement data can be directly transferred to Excel documents via USB or RS232 port.

Main Features

- LED touchscreen with large screen for displaying measurement results
- Optional lever gauge for measuring squareness
- Manual-automatic integrated
- Easy to operate, lightweight, and flexible
- Adjustable force size and force balance, directly displayed on the screen
- Automatic record of turning points
- High-precision measurement system
- Equipped with dual probes, measurement range expandable up to 312mm
- Optional wireless transmission module, optional printer

Standard Configuration

- 1 set of power adapter and a set of setting gauge
- A standard ruby Φ4 probe
- Test report and operation manual, one for each
- Dust cover

Surface Measurement

Maximum/Minimum/Difference

Diameter Measurement

Reference Surface

Pitch Diameter

Technical Parameters

Model	H1-400	H1-700	H1-1100
Measuring range	0-407mm	0-711mm	0-1110mm
Application scope	0-719mm	0-1023mm	0-1422mm
Resolution	0.001mm	0.001mm	0.001mm
Maximum allowable error	[2.5+L(mm)/300]μm	[2.5+L(mm)/300]μm	[2.5+L(mm)/300]μm
Repeatability (2S)	2μm	2μm	2μm
Allowable squareness error (forward)	5μm	8μm	11μm
Operation time	20h	20h	20h
Air-floating function	Yes	Yes	Yes
Force adjustment range	0.75-1.5N	0.75-1.5N	0.75-1.5N
Probe movement speed	1m/s	1m/s	1m/s
Net weight	21kg	24kg	33kg
Data output	USB/RS232	USB/RS232	USB/RS232

Function Application and Cases

The new H1 height gauge has optimized the measuring force system, allowing for the clamping of longer probes, resulting in improved repeatability and stability.

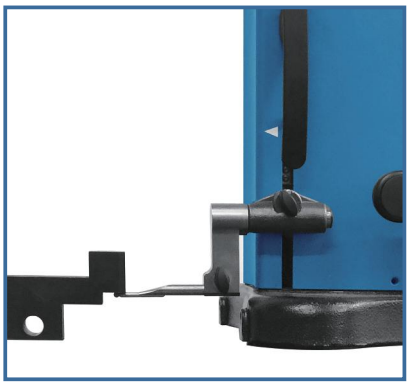

Height/Thickness/Dimension Chain Measurement

Diameter Measurement (Radius/Diameter Display Simultaneously)

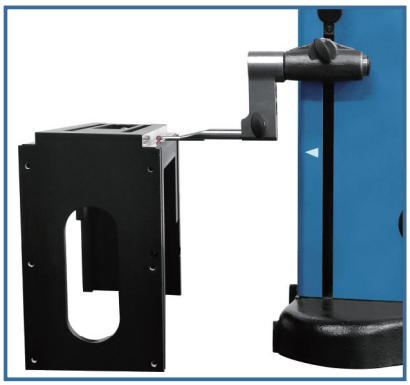

Maximum/Minimum/Difference Value Measurement

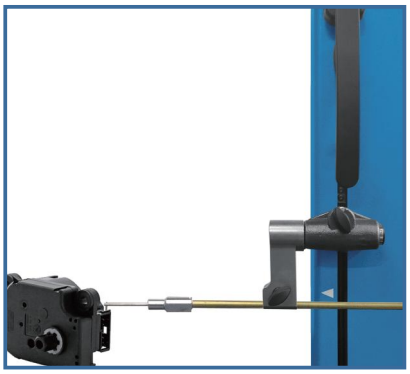

400mm super long and super light probe

Display screen can rotate 40 degrees

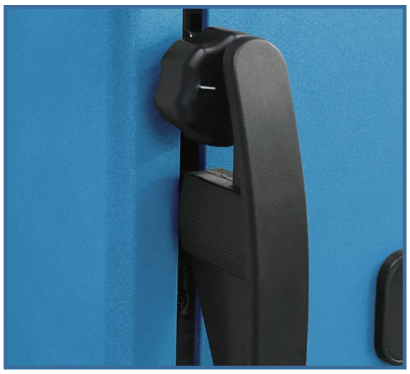

Adjusting the force balance

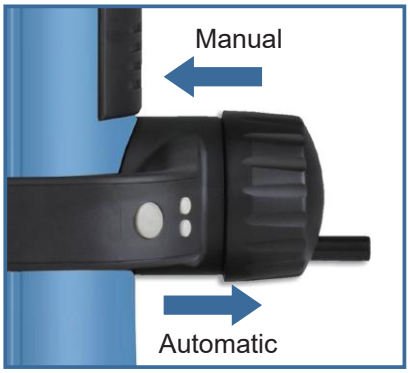

Handwheel (manual/automatic switch)

Probe kit

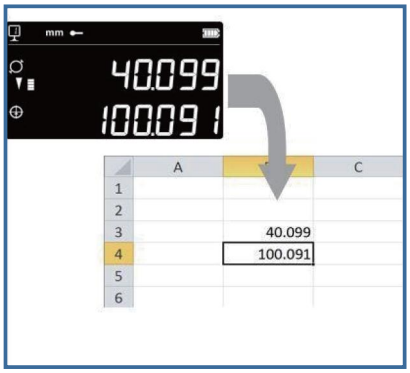

RS232/USB Interface Data Output

Two-dimensional Height Gauge, H2 Series

Jescale's H2 series two-dimensional height gauge features a unique patented bidirectional force measurement system that ensures better stability and repeatability. The user-friendly human-machine interface has a simple function keyboard, easy to operate and master, and powerful functions, providing programming functions and two-dimensional measurement. It can measure height, depth, groove width, inner and outer diameter, hole center distance, axis center distance, flatness, plane angle and squareness, straightness (optional accessories required), etc. The color LED touchscreen provides graphic prompts for operation, and the large screen displays measurement results, eliminating the need for complex function key training.

Main Features

- Adjustable electronic control of measuring force and force balance, optional extension up to 400mm.
- Manual and automatic integrated machine, high precision, fast measurement speed
- Heidenhain metal grating scale with minimal ambient temperature influence
- Full range absolute display, absolute measurement
- Dual probe holders are adopted to increase application range
- Air float function, adjustable air volume
- Two-dimensional measuring function, and programmable measurement
- Automatic record of turning points
- Color LED touch screen operation menu, full graphic operation instructions
- Environmental temperature display, temperature compensation feature
- Onsite data storage for later data processing
- RS232 and USB bidirectional interfaces, optional printer
- Optional wireless transmission module

Standard Configuration

- A set of power adapter
- A setting gauge
- A standard ruby Φ4 probe
- Test report and operation manual, one for each
- Dust cover

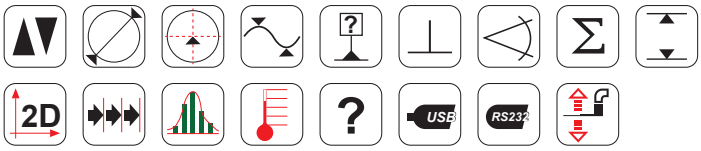

Technical Parameters

Model (two-dimensional manual-automatic integrated)	H2-400	H2-700	H2-1100
Absolute measurement range (grating scale length)	0-407mm	0-711mm	0-1110mm
Application scope	0-719mm	0-1023mm	0-1422mm
Resolution	0.0001mm	0.0001mm	0.0001mm
Maximum allowable error	[2.0+L(mm)/400]μm	[2.0+L(mm)/400]μm	[2.0+L(mm)/400]μm
Repeatability (2S)	1(Φ:2)μm		
Force adjustment range	0.75-1.5N		
Manual movement speed	1000mm/s		
Automatic movement speed	150mm/s		
Power supply	Rechargeable battery		
Run time on a single battery charge	12h		
Limit operating temperature:	+10 to +40°C		
Data output	USB/RS232		
Allowable squareness error (forward)	5μm	8μm	11μm
Overall height	780mm	1084mm	1482mm
Net weight	22kg	25kg	34kg

Function Application and Cases

Watch movement height measurement

Minor diameter measurement

Electronic probe for measuring squareness

Hole position measurement, intuitive and simple

Probe kit accessories

Adjustable measuring range

Maximum/minimum/difference measurement

Data transmission via PC

Rotatable display

High-precision gauge block comparator

The GCK high-precision gauge comparator combines absolute measurement and comparative measurement methods to perform gauge block testing. The instrument adopts German HEIDENHAIN large-range measurement sensors, with absolute measurement available within any 25mm range throughout the entire range. Within 150mm, only 6 reference gauge blocks are needed for measurement, covering all sizes of gauge blocks used. This effectively saves testing time, and achieves a repeatability of 0.03 micrometers in comparative measurement. The design is simple enough for one hand to operate the reference and measuring gauge blocks on the measuring table, making the measurement work very simple. The open design allows the entire calibration process of the gauge blocks to be observed, ensuring the reliability of the measurement results. The professional calibration software can meet the user's measurement needs, including gauge block testing, calibration agencies, and manufacturers, and can automatically determine the grade of gauge blocks and generate reports.

Technique Features

- Easy operation, high precision, accurate and reliable gauge calibration system.
- High rigidity cast iron workbench ensures stability.
- The high-precision grinding seven-rib workbench support allows the gauge block to be easily moved on the measuring bench without scratching or abrading the working surface of the gauge block.
- Equipped with a heat-insulating organic glass protective cover to ensure temperature stability during gauge block c alibration.
- The measurement software is easy to operate, with fully automatic data processing. It can set the correction value of standard gauge blocks and customer information, directly generate original records and certificate formats, and automatically determine the grade of gauge blocks.
- Gauge block positioning device and moving technology are adopted to easily complete the detection of gauge block center points and readings.

Oversized workbench

The grinding and ribbed workbench is plated with hard chrome and then ground. The surface is smooth and effectively protects the surface of the gauge block from wear. The gauge block can be placed at a constant temperature to ensure that the temperature difference between the gauge block and the workbench is kept to a minimum. The workbench has high hardness to ensure durability.

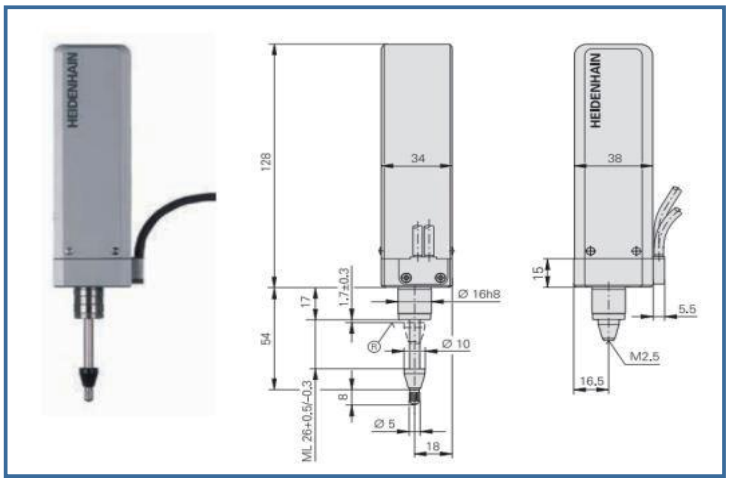

High-efficiency 25mm absolute measurement range

German HEIDENHAIN sensors can directly measure below 25mm gauge blocks, and for gauge blocks below 10mm, only one standard gauge block is needed as a reference, saving time! The measuring force is adjustable at 1N/1.25N/1.75N, with motor-controlled motion.

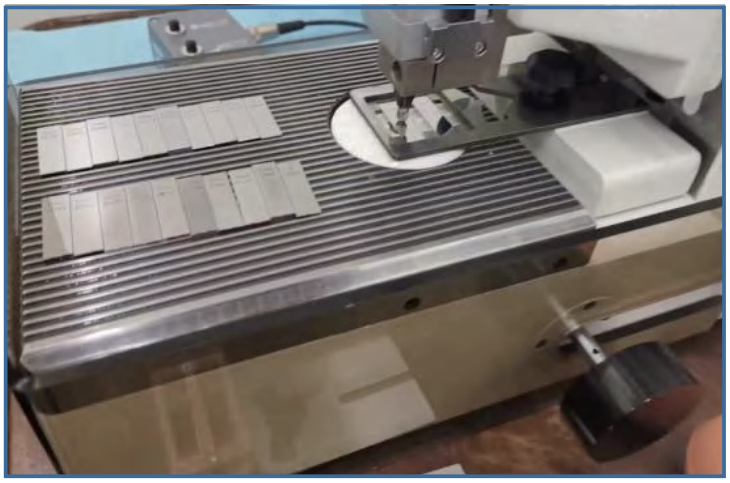

A patented device enables rapid movement of gauge blocks.

The three-way moving device of the gauge block can ensure the rapid and accurate movement of the measuring points of the standard block and the measured block!

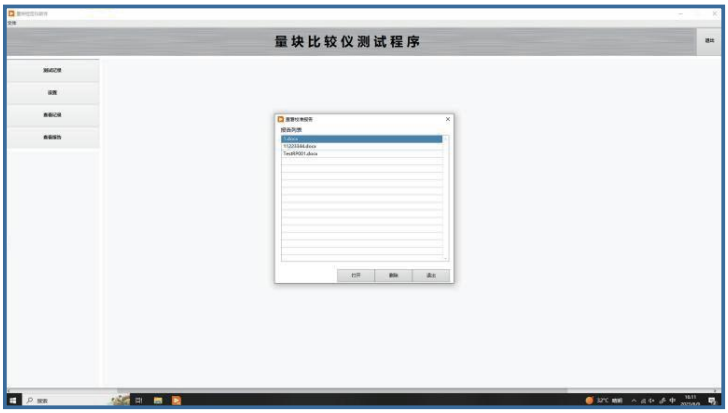

After entering standard gauge block information and saving it, the information will be displayed in the original record. After entering the information, save it again and then enter the traceability value of the standard gauge block. Information entered for standards includes certificate number, standard gauge block number, and manufacturer information.

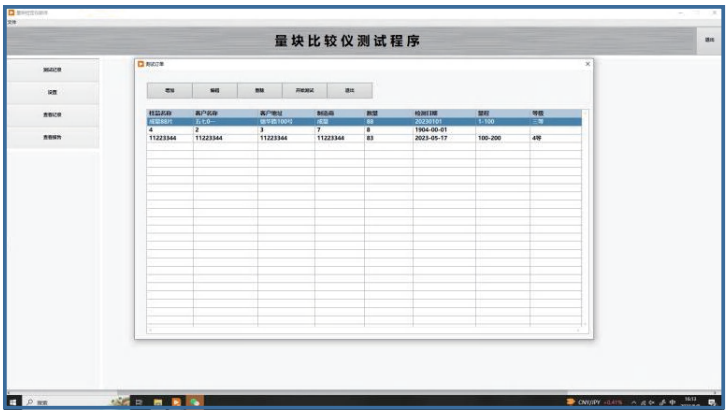

When testing gauge blocks, the traceability values of the standard gauge blocks are automatically displayed for value transmission. The first column shows the reading of the standard gauge block, and the second column shows the deviation of the standard gauge block.

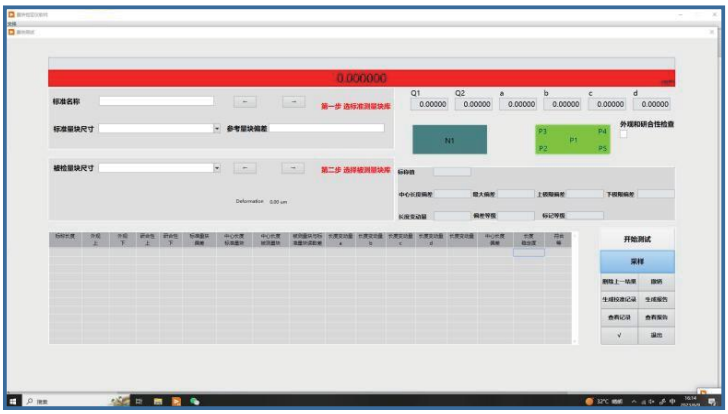

After entering and saving the information of the standard gauge, create the information of the test block and then proceed with the inspection. The inspection method can be selected as "Center Point Measurement Only" or "Including Length Change Measurement." If only center point data is inspected, only 4 data points will be checked. The software will display the interface on the left. When the circular black dot moves to the specified gauge block, the probe needs to be manually moved to the specified position for inspection.

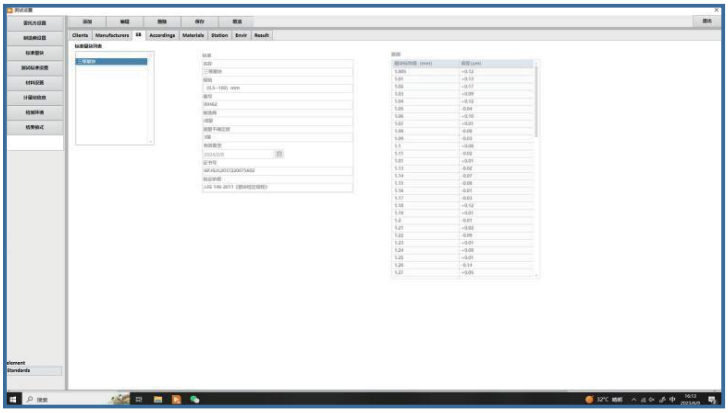

After entering and saving the information of the standard gauge, create the information of the test block and then proceed with the inspection. You can choose between "Center Point Measurement Only" and "Including Length Change Measurement". If the inspection includes length change, 8 points need to be inspected. The software will display the interface on the left. When the circular black dot moves to the specified gauge block, the probe needs to be manually moved to the specified position for inspection.

Standard Configuration

- 1 set of gauge comparator
- 1 set of thermal glass protective cover
- A set of gauge positioning fixture
- 1 set of gauge tweezers
- 1 set of hex adjustment wrenches
- A set of factory reports and operation manuals

Dimensions & Spec.

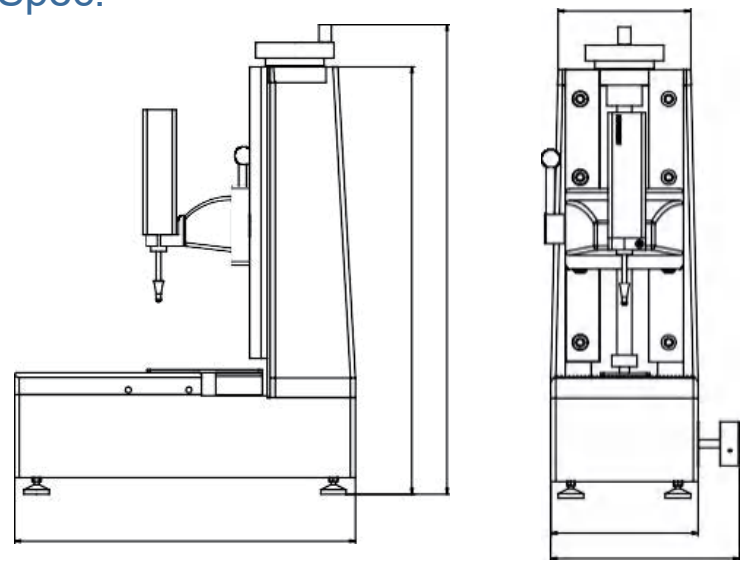

Technical Parameters

Model		GCK150
Measuring range	mm	150
Direct measurement range	mm	25
Maximum allowable error	μm	0.03+L(mm)/1000
Measuring force	N	0.85 / 1.0 / 1.45
Resolution	μm	0.01/0.001
Repeatability (2S)	μm	0.03
Measurement sensor		Incremental probe
Measuring system		German HEIDENHAIN transmissive glass ceramic phase grating ruler
Drive mode		Motor drive
Measurement software		Automatic sampling of measurement data, automatic result determination, and report generation
Calibration temperature	℃	Calibration temperature: 20℃±0.2℃; Temperature gradient: ≤0.5℃/hour
Ambient humidity		Humidity: 50%±5%;
Weight	kg	65
Working power supply		220V，50Hz

High-precision spherometer

The high-precision spherometer utilizes a combination of absolute measurement and comparative measurement, suitable for inspecting steel and ceramic balls, and also applicable for metrological calibration organizations to calibrate spherical and spherical standard plug gauges. The instrument uses the German HEIDENHAIN ultra-high precision measurement sensor, achieving 0.03 micrometer repeatability in comparative measurements. Its open design allows the entire calibration process of spherical objects to be fully observable, ensuring the reliability of measurement results. The instrument is controlled by a computer and, with professional calibration software, meets user measurement needs.

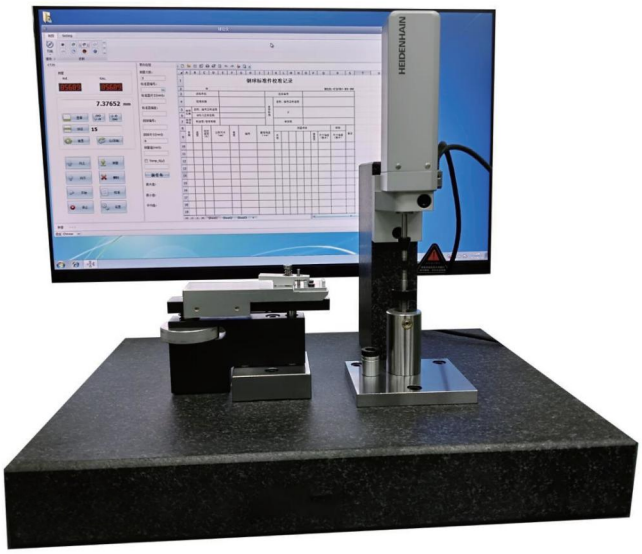

- Easy-to-operate, high-precision, accurate, and
- reliable spherical verification system.
- A high-rigidity marble platform ensures stability. The rotating nut feature allows the ball to be rotated by turning the nut, avoiding unstable forces applied when rotating the ball by other means during measurement.
- Equipped with spherical positioning devices and mobility technology, it easily completes indication verification.

Technical Parameters

Model		KMP25	KMP60
Measuring range	mm	0.5 - 25	0.5 - 60
Application scope	mm	25	60
Measuring force	N	0.85 / 1.0 / 1.45	
Resolution	μm	0.01/0.001	
Repeatability (2S)	μm	0.03	
Standard spherical uncertainty	μm	0.05	
Drive mode		Motor drive	
Calibration environment		Temperature 20±0.2 ℃, humidity 50%±5%	
Weight	kg	65	75

Grating-style indicator calibration instrument

The electronic vertical indicator calibrator utilizes the Abbe principle and is designed with precision guide rails, screws, handwheels, a high-precision grating system, control motors, and a digital display circuit. The precision guide rails ensure accurate and stable movement. The electronic handwheel and touchscreen control system significantly reduce the workload during measurement, allowing direct measurement of instruments with travel of 50 mm/2 inches. It is compact and lightweight, making it portable and greatly facilitating on-site inspections.

- The machine is easy to operate, highly precise, accurate, and reliable.
- High rigidity cast iron workbench ensures stability.
- User-friendly structure design
- Conforming to the Abbe principle
- Smooth electronic handwheel control.
- High-precision Metal Grating Scale

Technical Parameters

Model		NCK50	NCK100
Measuring range	mm	50	100
Maximum allowable error	μm	≤0.5+L(mm)/100	
Resolution	μm	0.1	
Measuring system		High-precision Grating Sensor and Precise Displacement Motion Control System	
Drive mode		Motor drive	
Calibration temperature	℃	Calibration temperature: 20℃±1℃; Temperature gradient: ≤0.5℃/hour	
Ambient humidity		Humidity: 50%±5%;	
Weight	kg	18	30
Working power supply		220V，50Hz	

Squareness gauge

The Square Inspect series squareness gauge is a new high-precision squareness measurement system designed for calibrating right-angle rulers. It consists of a high-precision marble angle ruler and an air-floating measurement system. Widely used for calibrating right-angle rulers in various measurement units and for verticality testing of factory products, its reasonable structural design and innovative air-floating bearings ensure stability and high precision. The professional measurement software meets user needs, and certificates are automatically generated upon completion of testing.

- The marble base ensures stability and is not easily affected by temperature changes.
- The high-precision air-floating motion system ensures the measurement system moves smoothly and quickly, and moves up and down without friction.

Standard Configuration

- 1 set of squareness gauge main unit
- 1 set of air-floating measurement module
- 1 set of measurement analysis software
- 1 set of measurement sensor
- Air filter
- Motor control box
- Auxiliary fixtures
- Factory certificate and operation manual, one for each

Technical Parameters

Model		300	500	700	1000
Measuring range	mm	300	500	700	1000
Measurement precision	μm	≤0.5+L(mm)/500			
Resolution	μm	0.1			
Measuring system		Incremental probe			
Calibration temperature	℃	Calibration temperature: 20℃±1℃; Temperature gradient: ≤0.5℃/hour			
Ambient humidity		Humidity: 50%±5%;			
Air pressure		0.4 - 0.6 Mpa			
Drive mode		Motor-driven/manual movement			

Straightness Gauge

Straight Inspect consists of high-precision marble or ceramic guide rails and a vacuum air-floating measurement system. It is widely used for the straightness measurement of various high-precision components.

- The marble base ensures stability and is not easily affected by temperature changes.
- The high-precision air-floating motion system ensures the measurement system moves smoothly and quickly, with friction-less vertical movement.

Standard Configuration

- A set of straightness inspector main unit
- A set of vacuum air-floating measurement module
- 1 set of measurement analysis software
- 1 set of measurement sensor
- Air filter
- Auxiliary fixtures
- Factory certificate and operation manual, one for each

Technical Parameters

Model		300	500	1000
Measuring range	mm	300	500	1000
Measurement precision	μm	≤ 0.5+L(mm)/500		
Resolution	μm	0.1		
Measuring system		Incremental probe		
Calibration temperature	℃	Calibration temperature: 20℃±1℃; Temperature gradient: ≤0.5℃/hour		
Ambient humidity		Humidity: 50%±5%;		
Air pressure		0.4 - 0.6 Mpa		
Drive mode		Motor-driven/manual movement		